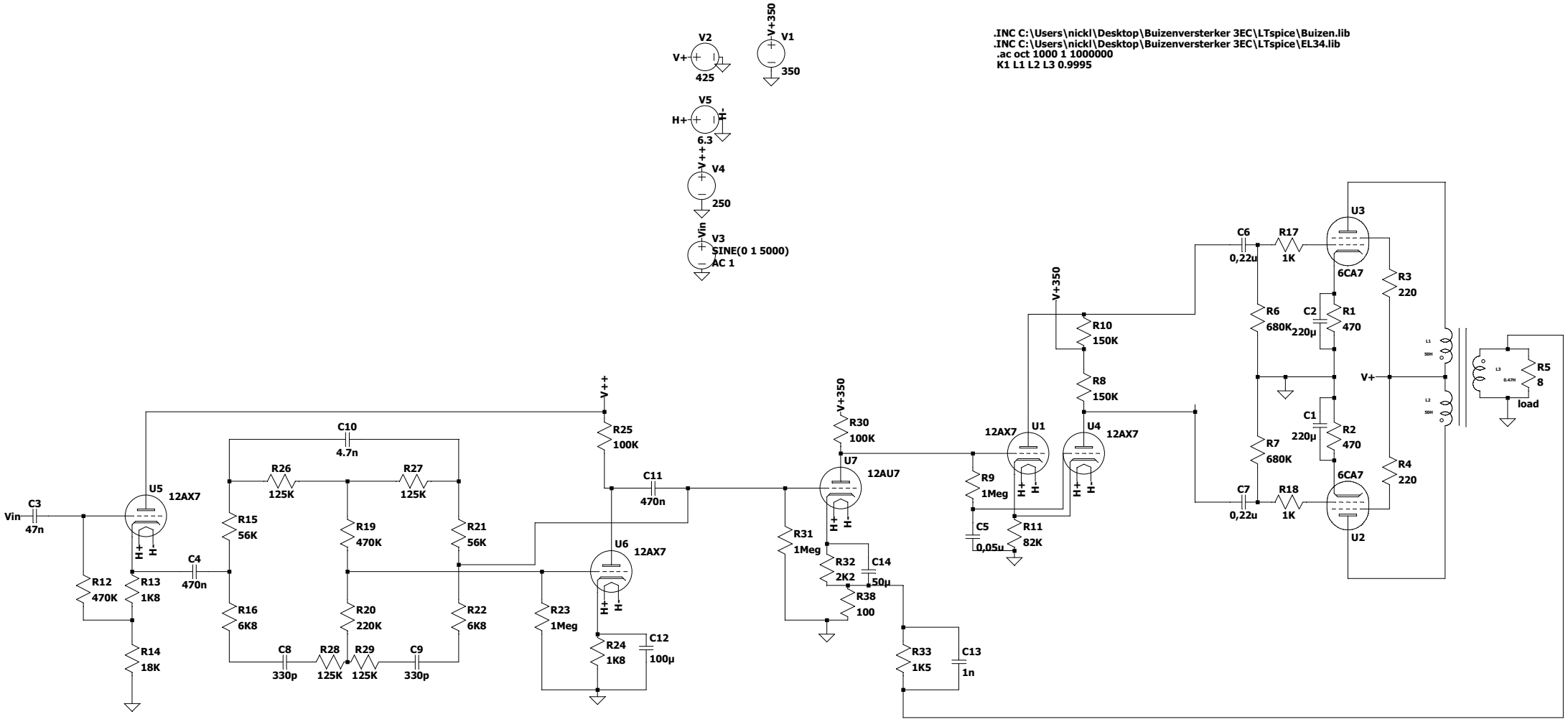

--- C:\Users\nickl\Desktop\Buizenversterker 3EC\LTspice\Files\Amp opzet 031.asc ---