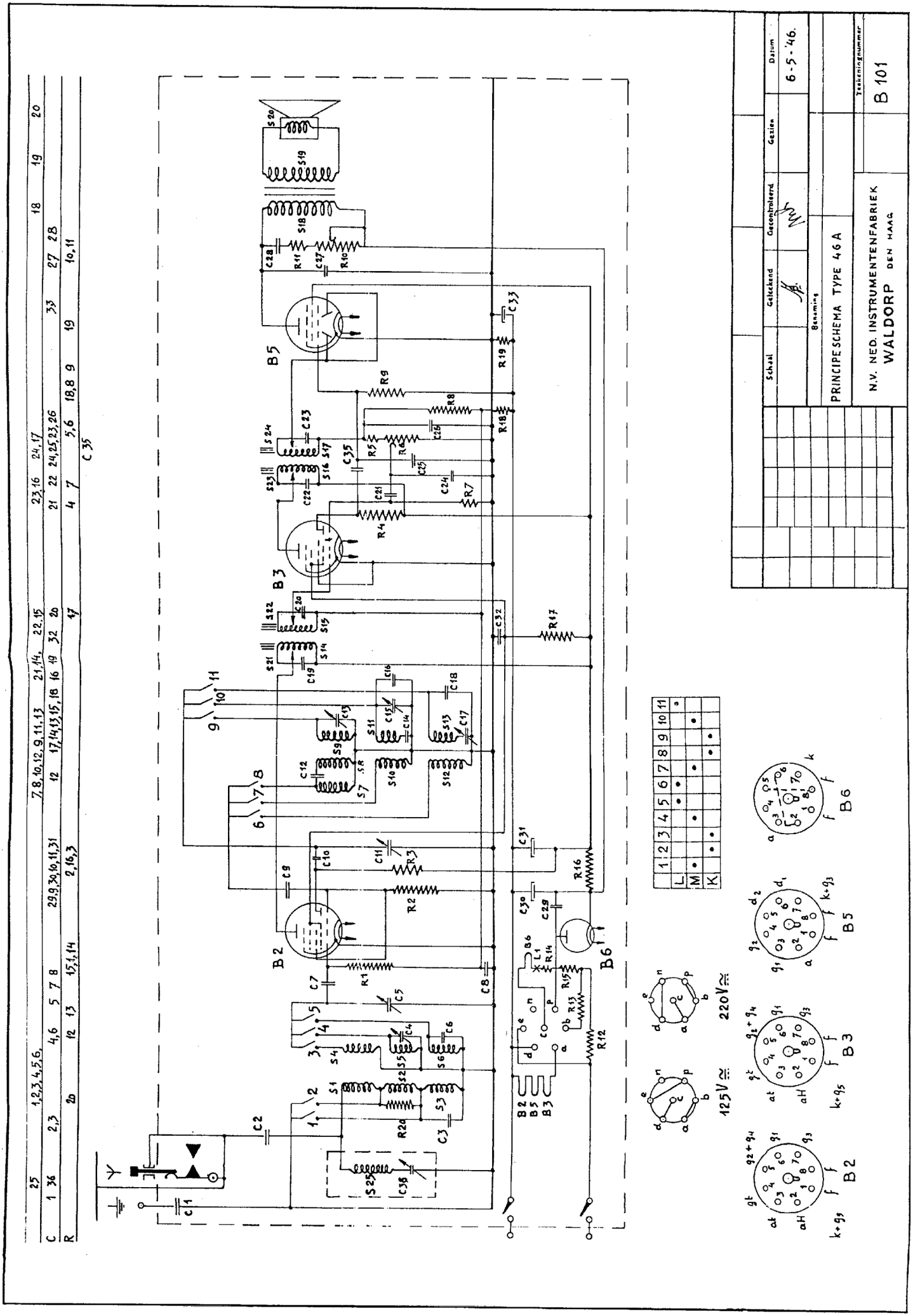

www.radiomuseum.org; upload by Arpad Roth; download by Henk van 't Kruis Thu May 12 11:22:17 CEST 2011 [2136 x 3061, 141kb]