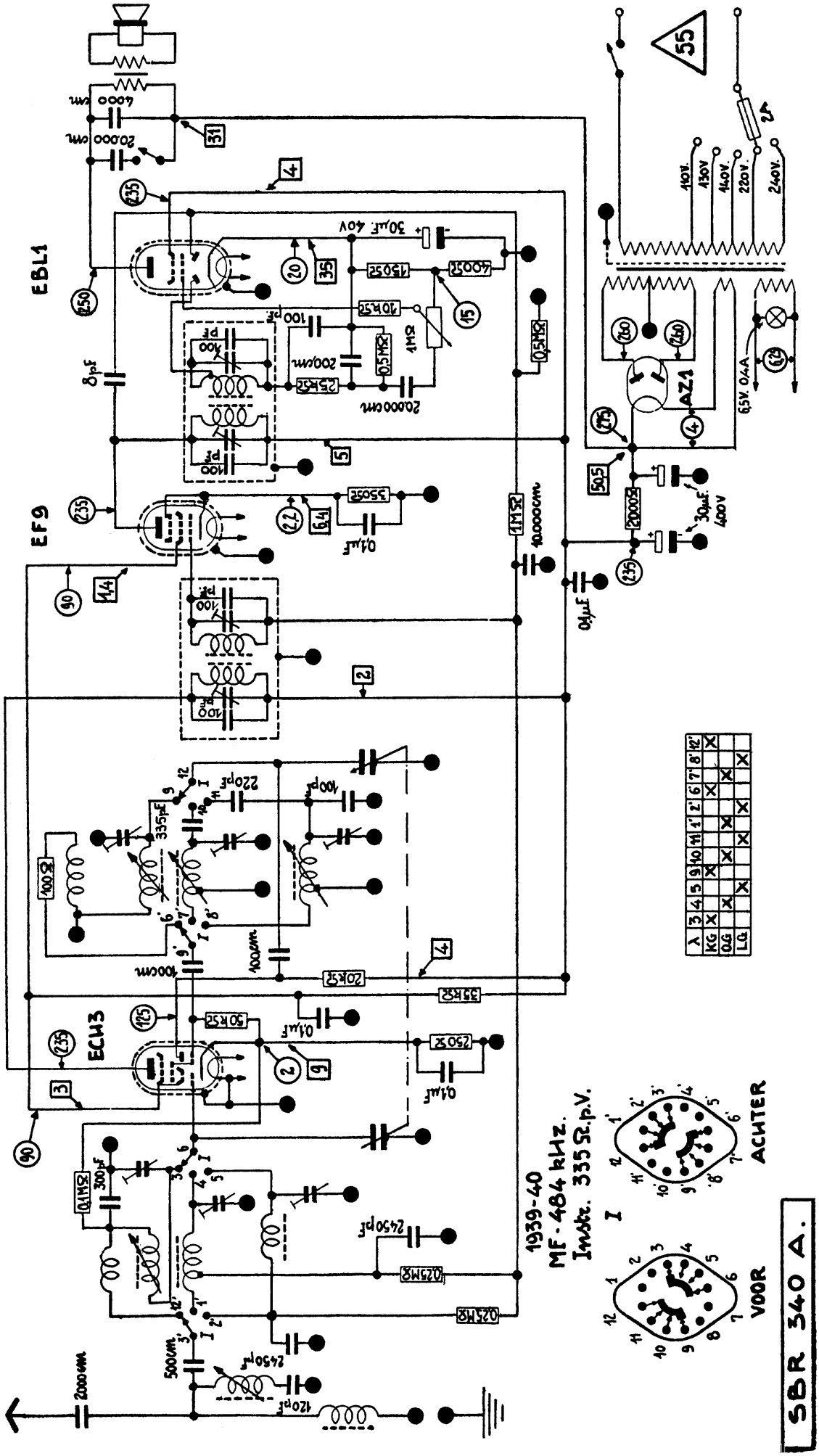

www.radiomuseum.org; upload by Hugo Sneyers; download by Marco Lagendijk Mon Nov 09 21:59:14 CET 2015 [2787 x 4854, 152kb, 96 DPI]